REV.	ECN NO OR DESCRIPTION	REVISED	DATE
1	PROPOSE ONLY	ALLEN	2011.06.25
2	MODIFY THE SHELL	ALLEN	2017.09.25

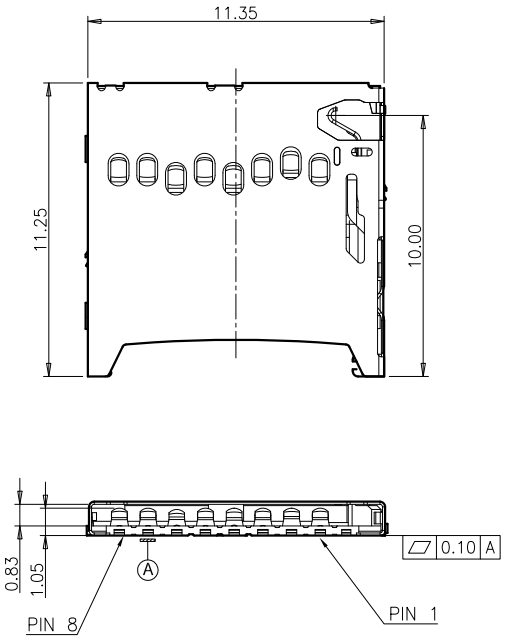

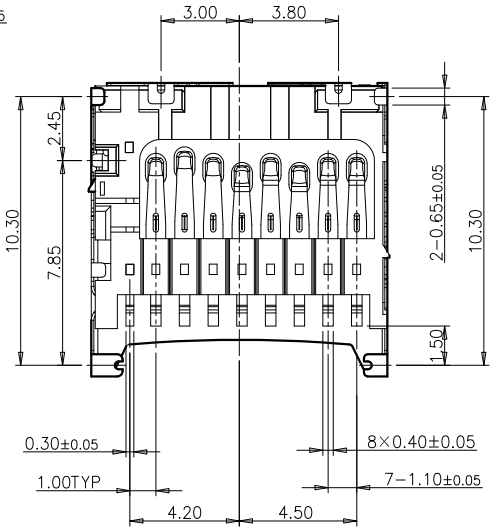

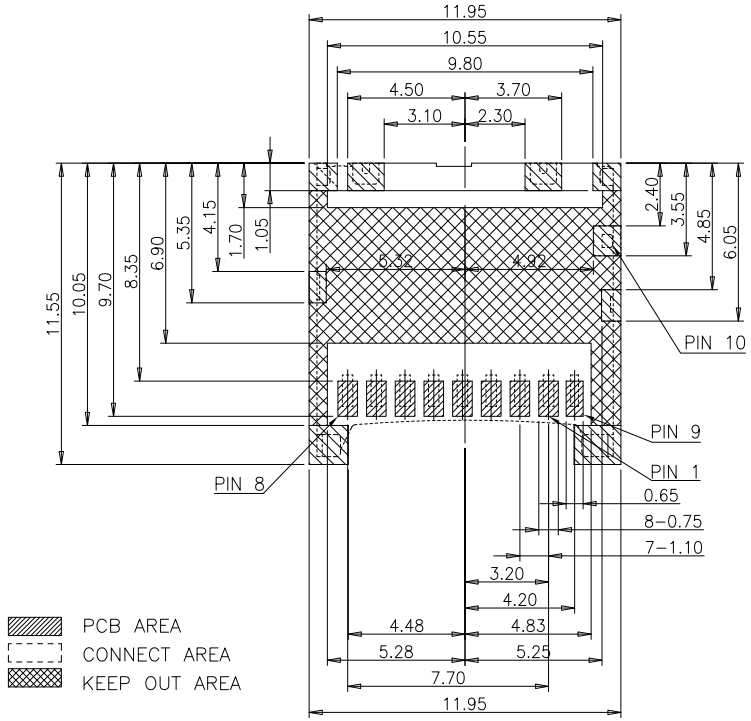

(Part Mounting Side)
GENERAL TOLERANCE ±0.05
RECOMMENED P.C.BOARD LAYOUT(TOP VIEW)

CIRCUIT DIAGRAM FOR CARD DETECT SWITCH

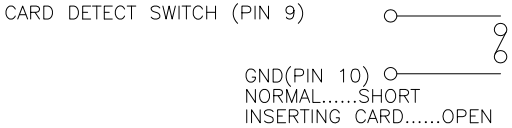

NORMAL.....SHORT
INSERTING CARD.....OPEN

MATERIALS
1. HOUSING : THERMOPLASTIC (UL 94V-0).
2. TERMINAL : COPPER ALLOY, PLATING SEE TABLE.
3. SHELL : SUS.

SPECIFICATION
1. CURRENT RATING : 0.5 A. MAX.
2. DIELECTRIC WITHSTANDING VOLTAGE : 500V AC R.M.S. FOR 1 MINUTE.
3. INSULATION RESISTANCE : 1000MΩ MIN.AT 500V DC.
4. CONTACT RESISTANCE : 100mΩ MAX.
5. OPERATING LIFE: 3000 CYCLES.
6. OPERATING TEMPERATURE : -40°C TO +85°C.

MICRO SD CARD

PIN NO.	NAME	TYPE	DESCRIPTION
P1	DAT 2	I/O/PP	DATE LINE(BIT 2)
P2	CD/DAT 3	I/O/PP	CARD DETECT DATE LINE(BIT3)
P3	CMD	PP	COMMAND TESPONSE
P4	VDD	S	SUPPLY VOLTAGE
P5	CLK	I	CLOCK
P6	VSS	S	
P7	DAT 0	I/O/PP	DATE LINE(BIT 0)
P8	DAT 1	I/O/PP	DATE LINE(BIT 1)

ITEM	NAME	Q'TY	FINISH	NOTE
4	SW A	1	Ni/Au PLATING	COPPER ALLOY;AU PLATED
3	CONTACT	8	Ni/Au PLATING	COPPER ALLOY;AU PLATED
2	SHELL	1	Ni/Au PLATING	SUS,Au plated On solder area
1	HOUSING	1	———	THERMOPLASTIC; COLOR:BLACK

UNLESS OTHERWISE SPECIFED TOLERANCES

DECIMALS: X :±0.5, X.X :±0.20, X.XX :±0.10

ANGLES: X :±2°, X.X :±1°

台灣訊普電子科技有限公司

TITLE	1.32H T-FLASH CARD CONN			
DWN	ALLEN	PART NO.	TF-110	
CHKD	KEVIN	SCALE:1:1	UNIT: mm	
APVD	ERIC.W	SIZE: A3	SHEET:1OF 1	REV: A2

CUSTOMER COPY