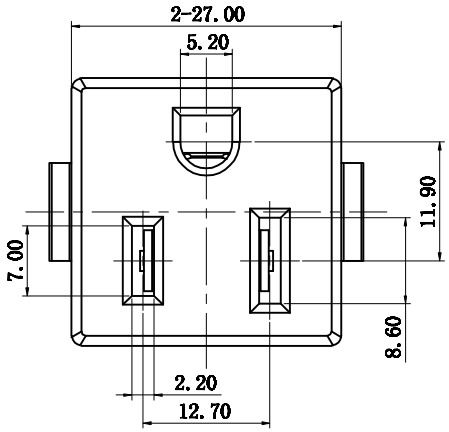

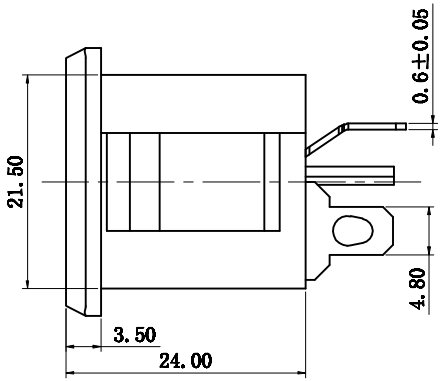

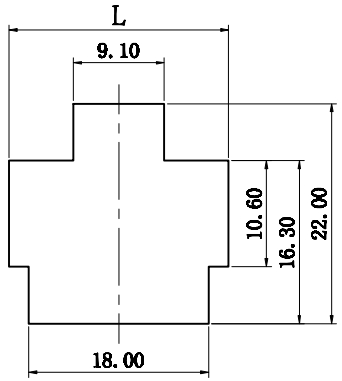

PANEL CUT-OUT

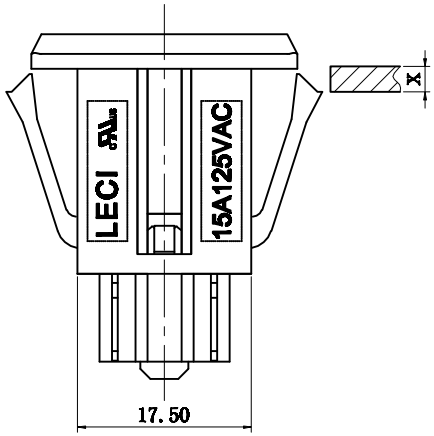

X	L
0.8	24
1.0	24.6
1.2	25.2
1.6～2.0	26.2

Rating :	15A 125V AC T105 UL cUL
Insert And Extract Force:	1.36kgf~6.8kgf
Terminal Strength:	≥80N
Operating Life:	≥5000 cycles
Withstand Voltage:	Between all terminals:2500VAC（50-60Hz)1min terminals to Base:3750V AC（50-60Hz)1min Leakage Current : 1mA
Insulation Resistance:	≥100MΩ 500V DC
Body Materil:	NYLON 66 94V-2~0

REV.	DATE	REVISION DESCRIPTION	ISSUE

普通公差
COMMON TOLERANCE :

UP TO 5	±0.20
ABOVE 5 TO 30	±0.30
ABOVE 30	±0.50
ANGULAR	±5°

LECI 乐磁电子有限公司
LECI ELECTRONICS CO.,LTD

单位 UNIT	mm	投影 PROJECTED		品名 PRODUCT NAME	Ac Outlet
绘图 DRAWN BY	黄旭程	核对 CHECKED BY		型号 MODEL NO.	DB-F
日期 DATE	2016.12.16	核准 APPROVAL BY		料号 PART NO.	DB-F-M