LITEON®
OPTOELECTRONICS

SMD LED

Product Data Sheet

LTW-M670ZVS-M5

Spec No.: DS22-2009-0099

Effective Date: 12/20/2012

Revision: C

LITE-ON DCC

RELEASE

BNS-OD-FC001/A4

LITE-ON Technology Corp. / Optoelectronics
No.90,Chien 1 Road, Chung Ho, New Taipei City 23585, Taiwan, R.O.C.
Tel: 886-2-2222-6181 Fax: 886-2-2221-1948 / 886-2-2221-0660
http://www.liteon.com/opto

Features

* Package in 8mm tape on 7" diameter reels.
* Compatible with automatic placement equipment.
* Compatible with infrared and vapor phase reflow solder process.
* EIA STD package.
* I.C. compatible.
* Meet green product and Pb-free(According to RoHS)

Package Dimensions

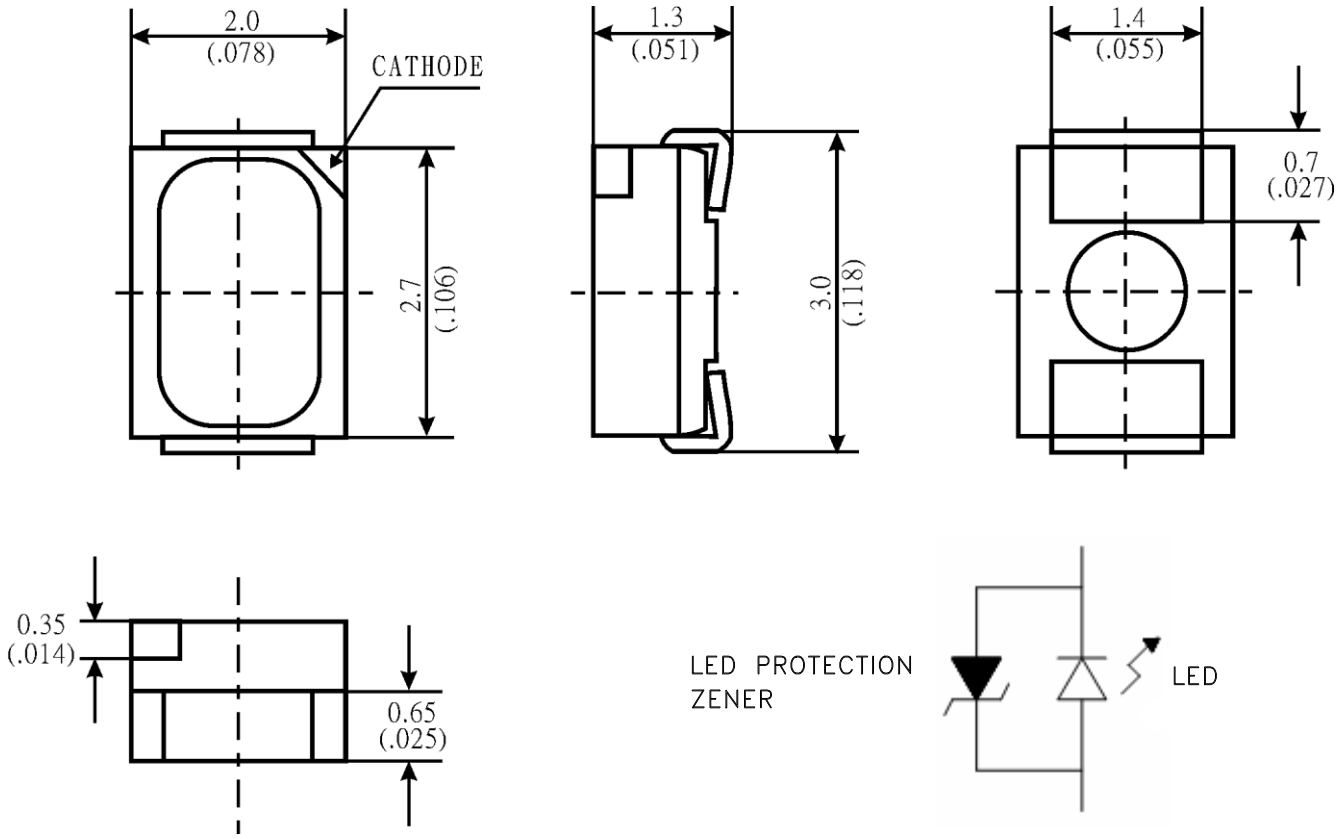

Part No.	Lens Color	Source Color
LTW-M670ZVS-M5	Yellow	InGaN White

Notes:
1. All dimensions are in millimeters (inches).
2. Tolerance is ±0.2 mm (.008") unless otherwise noted.

Absolute Maximum Ratings at Ta=25℃

Parameter	LTW-M670ZVS-M5	Unit
Power Dissipation	120	mW
Peak Forward Current (1/10 Duty Cycle, 0.1ms Pulse Width)	100	mA
DC Forward Current	30	mA
Reverse Voltage (Note)	5	V
Operating Temperature Range	-30℃ to + 85℃	
Storage Temperature Range	-40℃ to + 100℃	
Wave Soldering Condition	260℃ For 5 Seconds	

Note: Operating the LED (in an application) under reverse bias condition might result in damage or failure of the component.

IR-Reflow Soldering Profile for lead free soldering (Acc. to J-STD-020D)

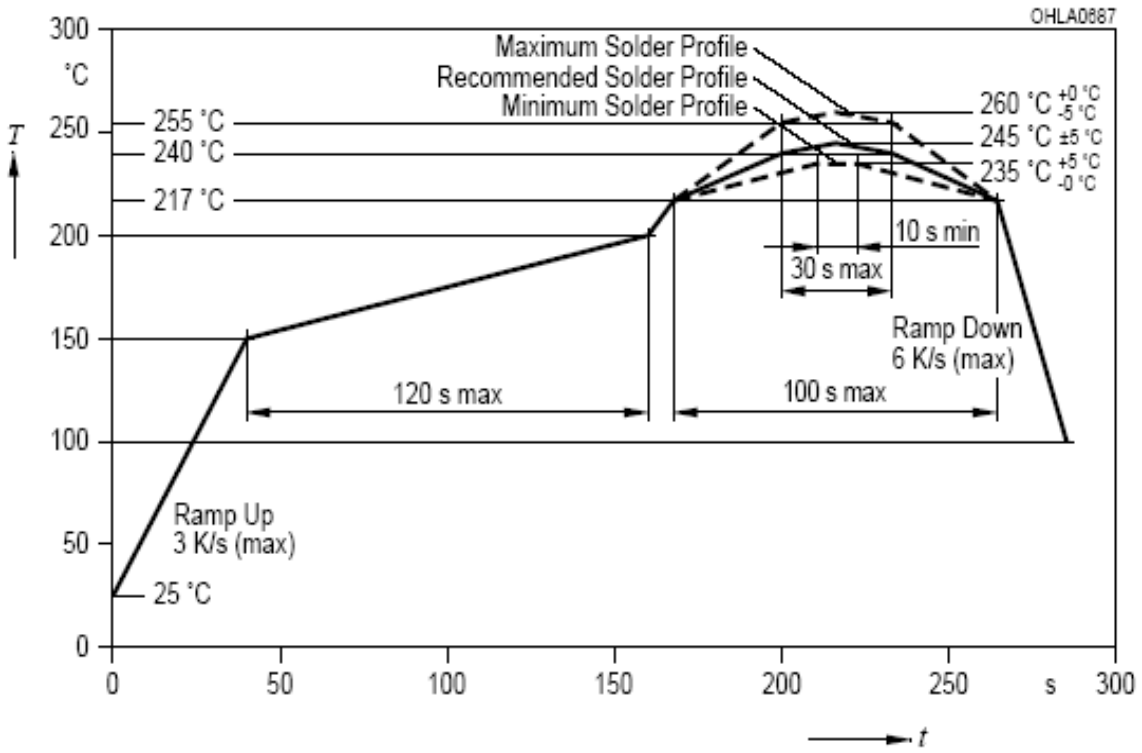

Electrical Optical Characteristics At Ta=25℃

Parameter	Symbol	Part No. LTW-	Min.	Typ.	Max.	Unit	Test Condition
Luminous Intensity	I_V	M670ZVS-M5	1700	-	2700	mcd	I_F = 20mA Note 1, 2, 5
Luminous Flux	Φ_V	M670ZVS-M5		5000		mlm	I_F = 20mA Note 1, 2, 5
Viewing Angle	$2\theta 1/2$	M670ZVS-M5		120		deg	Fig.6
Chromaticity Coordinates	x	M670ZVS-M5		0.29			I_F = 20mA Note 3, 5 Fig.1
	y			0.27			
Peak Wavelength	Wp	M670ZVS-M5		450		nm	I_F = 20mA
Forward Voltage	V_F	M670ZVS-M5	2.9	3.3	3.5	V	I_F = 20mA
ESD-Withstand Voltage	ESD	M670ZVS-M5	2K			V	HBM

Note: 1. Luminous intensity is measured with a light sensor and filter combination that approximates the CIE eye-response curve.

2. Iv classification code is marked on each packing bag.

3. The chromaticity coordinates (x, y) is derived from the 1931 CIE chromaticity diagram.

4. Caution in ESD:

Static Electricity and surge damages the LED. It is recommended using a wrist band or anti-electrostatic glove when handling the LED. All devices, equipment and machinery must be properly grounded.

5. CAS140B is the test standard for the chromaticity coordinates (x, y) & IV.

6. The chromaticity coordinates (x, y) guarantee should be added ± 0.005 tolerance.

Bin Code List

V_F Spec. Table		
VF Bin	Forward Voltage (V) at I_F = 20mA	
	Min.	Max.
V0	2.9	3.0
V1	3.0	3.1
V2	3.1	3.2
V3	3.2	3.3
V4	3.3	3.4
V5	3.4	3.5

Tolerance on each Forward Voltage bin is +/-0.10 volt

IV Spec. Table		
IV Bin	IV (mcd) at I_F = 20mA	
	Min.	Max.
S71	1700	1800
S81	1800	1900
S91	1900	2000
T01	2000	2100
T11	2100	2200
T21	2200	2300
T31	2300	2400
T41	2400	2500
T51	2500	2600
T61	2600	2700

Tolerance on each Luminous Intensity bin is +/- 5%.

Color Ranks Table					
Ranks	Color bin limits at I_F = 20mA				
	CIE 1931Chromaticity coordinates				
B	x	0.279	0.279	0.289	0.289
	y	0.262	0.252	0.270	0.280
C	x	0.279	0.279	0.289	0.289
	y	0.252	0.242	0.261	0.270
F	x	0.289	0.289	0.299	0.299
	y	0.280	0.270	0.288	0.298
G	x	0.289	0.289	0.299	0.299
	y	0.270	0.261	0.278	0.288

Tolerance on each Hue (x, y) bin is +/- 0.005.

Typical Electrical / Optical Characteristics Curves

(25°C Ambient Temperature Unless Otherwise Noted)

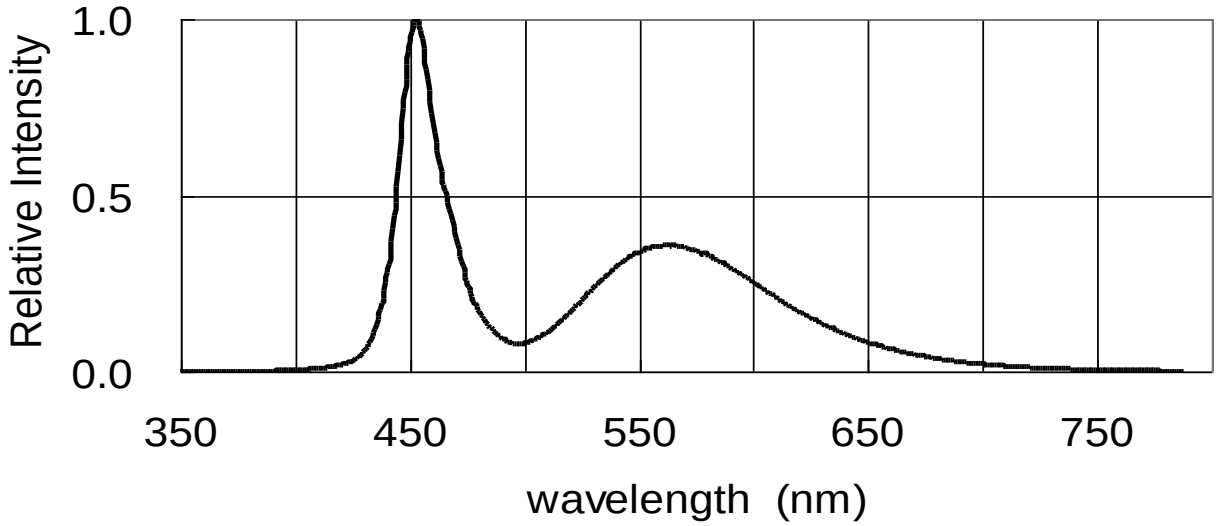

Fig.1 RELATIVE INTENSITY VS. WAVELENGTH

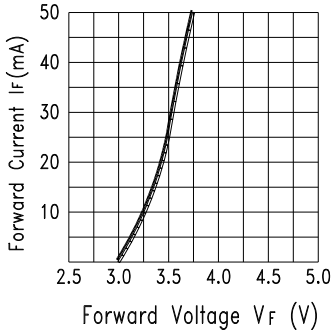

Fig.2 Forward Current vs. Forward Voltage

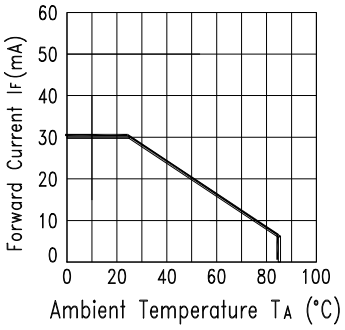

Fig.3 Forward Current Derating Curve

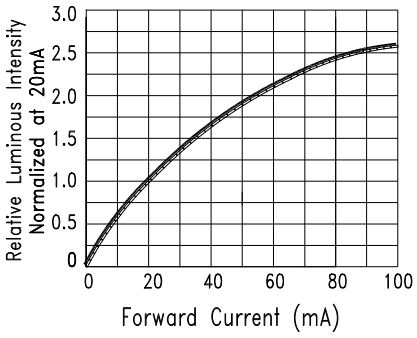

Fig.4 Relative Luminous Intensity vs. Forward Current

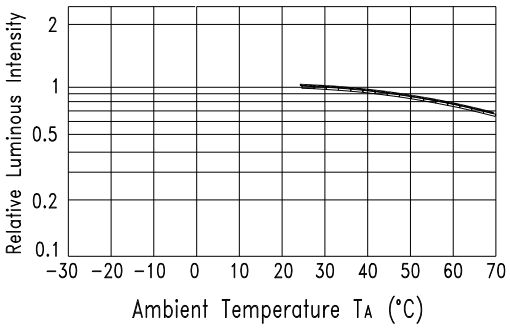

Fig.5 Luminous Intensity vs. Ambient Temperature

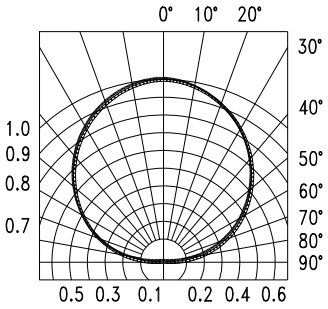

Fig.6 Spatial Distribution

User Guide

Cleaning

Do not use unspecified chemical liquid to clean LED they could harm the package.
If cleaning is necessary, immerse the LED in ethyl alcohol or isopropyl alcohol at normal temperature for less than one minute.

Recommend Printed Circuit Board Attachment Pad

Infrared / vapor phase
Reflow Soldering

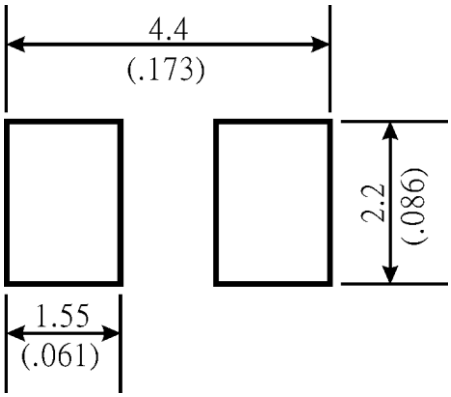

Package Dimensions of Tape

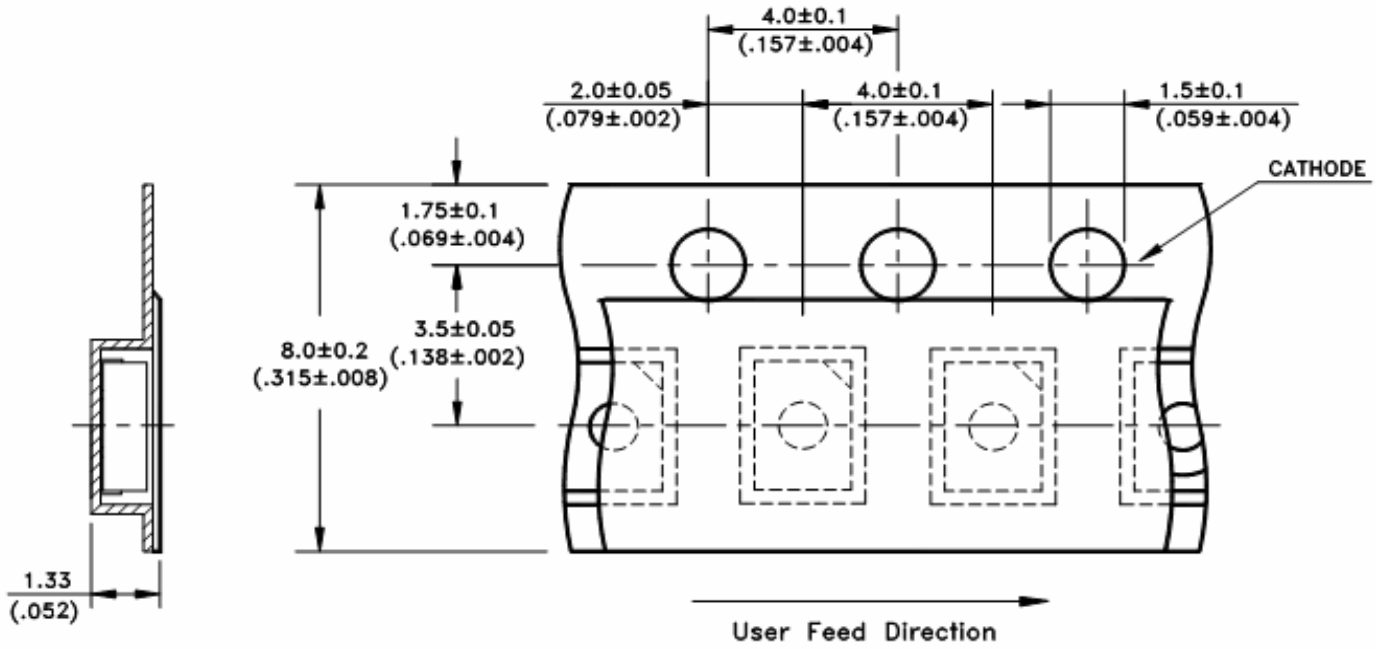

Note:

1. All dimensions are in millimeters (inches).

Package Dimensions of Reel

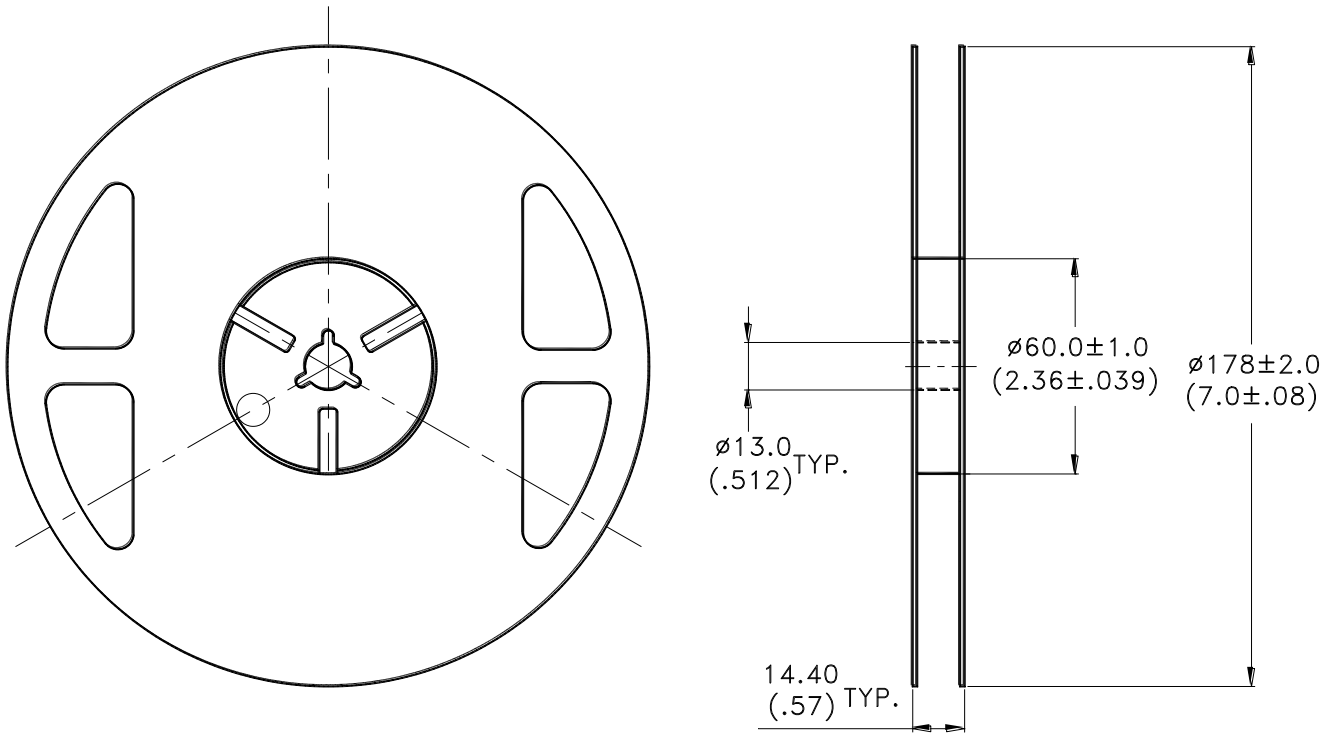

Notes:

1. Empty component pockets sealed with top cover tape.
2. 7 inch reel-2000 pieces per reel.
3. Minimum packing quantity is 500 pieces.
4. The maximum number of consecutive missing lamps is two.
5. In accordance with EIA-481-1-B specifications.

CAUTIONS

1. Application

The LEDs described here are intended to be used for ordinary electronic equipment (such as office equipment, communication equipment and household applications).Consult Liteon's Sales in advance for information on applications in which exceptional reliability is required, particularly when the failure or malfunction of the LEDs may directly jeopardize life or health (such as in aviation, transportation, traffic control equipment, medical and life support systems and safety devices).

2. Storage

This product is qualified as Moisture sensitive Level 3 per JEDEC J-STD-020 Precaution when handing this moisture sensitive product is important to ensure the reliability of the product.

The package is sealed:

The LEDs should be stored at 30℃ or less and 90%RH or less. And the LEDs are limited to use within one year, while the LEDs is packed in moisture-proof package with the desiccants inside.

The package is opened:

The LEDs should be stored at 30℃ or less and 60%RH or less. Moreover, the LEDs are limited to solder process within 168hrs. If the Humidity Indicator shows the pink color in 10% even higher or exceed the storage limiting time since opened, that we recommended to baking LEDs at 60℃ at least 48hrs. To seal the remainder LEDs return to package, it's recommended to be with workable desiccants in original package.

3. Cleaning

Use alcohol-based cleaning solvents such as isopropyl alcohol to clean the LED if necessary.

4. Soldering

Recommended soldering conditions:

Reflow soldering		Wave Soldering		Soldering iron	
Pre-heat Pre-heat time Soldering Temp. Soldering time	120~150℃ 120 sec. Max. 260℃ Max. 30 sec. Max.	Pre-heat Pre-heat time Solder wave Soldering time	100℃ Max. 60 sec. Max. 260℃ Max. 10 sec. Max.	Temperature Soldering time	300℃ Max. 3 sec. Max. (one time only)

5. Drive Method

An LED is a current-operated device. In order to ensure intensity uniformity on multiple LEDs connected in parallel in an application, it is recommended that a current limiting resistor be incorporated in the drive circuit, in series with each LED as shown in Circuit A below.

Circuit model A

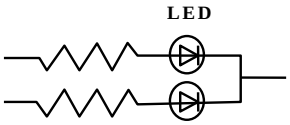

Circuit model B

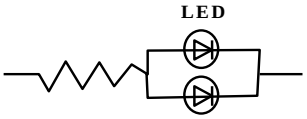

(A) Recommended circuit.

(B) The brightness of each LED might appear different due to the differences in the I-V characteristics of those LEDs.

6. ESD (Electrostatic Discharge)

Static Electricity or power surge will damage the LED.

Suggestions to prevent ESD damage:

- Use of a conductive wrist band or anti-electrostatic glove when handling these LEDs.
- All devices, equipment, and machinery must be properly grounded.
- Work tables, storage racks, etc. should be properly grounded.
- Use ion blower to neutralize the static charge which might have built up on surface of the LED's plastic lens as a result of friction between LEDs during storage and handling.

ESD-damaged LEDs will exhibit abnormal characteristics such as high reverse leakage current, low forward voltage, or "no lightup" at low currents.
To verify for ESD damage, check for "light up" and Vf of the suspect LEDs at low currents.
The Vf of "good" LEDs should be >2.0V@0.1mA for InGaN product and >1.4V@0.1mA for AlInGaP product.

7. Reliability Test

Test Item	Test Condition	Reference Standard	Note	Number of Damaged
Resistance to Soldering Heat (Reflow Soldering)	Tsld=260℃, 10sec.	JEITA ED-4701 300 301	2 times	0/30
Solderability (Reflow Soldering)	Tsld=245±5℃, 3sec. (Lead Free Solder)	JEITA ED-4701 300 303	1 time Over 95%	0/30
Thermal Shock	-30℃ ~ 85℃ 30min.. 30min.	JEITA ED-4701 300 307	100 cycles	0/30
Temperature Cycle	-40℃ ~ 25℃ ~ 100℃ ~ 25℃ 30min. 5min. 30min. 5min.	JEITA ED-4701 100 105	100 cycles	0/30
High Temperature Storage	Ta=100℃	JEITA ED-4701 200 201	1000 hrs.	0/30
Temperature Humidity Storage	Ta=60℃, RH=90%	JEITA ED-4701 100 103	1000 hrs.	0/30
Low Temperature Storage	Ta=-40℃	JEITA ED-4701 200 202	1000 hrs.	0/30
Steady State Operating Life Condition 1	Ta=25℃, IF=20mA		1000 hrs.	0/30
Steady State Operating Life Condition 2	Ta=25℃, IF=30mA		500 hrs.	0/30
Steady State Operating Life of High Temperature	Ta=85℃, IF=5mA		1000 hrs.	0/30
Steady State Operating Life of High Humidity Heat	60℃, RH=90% , IF=15mA		500 hrs.	0/30
Steady State Operating Life of low Temperature	Ta=-30℃, IF=20mA		1000 hrs.	0/30

8. Others

The appearance and specifications of the product may be modified for improvement without prior notice.

9. Suggested Checking List

Training and Certification

1. Everyone working in a static-safe area is ESD-certified?
2. Training records kept and re-certification dates monitored?

Static-Safe Workstation & Work Areas

1. Static-safe workstation or work-areas have ESD signs?
2. All surfaces and objects at all static-safe workstation and within 1 ft measure less than 100V?
3. All ionizer activated, positioned towards the units?
4. Each work surface mats grounding is good?

Personnel Grounding

1. Every person (including visitors) handling ESD sensitive (ESDS) items wear wrist strap, heel strap or conductive shoes with conductive flooring?
2. If conductive footwear used, conductive flooring also present where operator stand or walk?
3. Garments, hairs or anything closer than 1 ft to ESD items measure less than 100V*?
4. Every wrist strap or heel strap/conductive shoes checked daily and result recorded for all DLs?
5. All wrist strap or heel strap checkers calibration up to date?
   Note: *50V for Blue LED.

Device Handling

1. Every ESDS items identified by EIA-471 labels on item or packaging?
2. All ESDS items completely inside properly closed static-shielding containers when not at static-safe workstation?
3. No static charge generators (e.g. plastics) inside shielding containers with ESDS items?
4. All flexible conductive and dissipative package materials inspected before reuse or recycle?

Others

1. Audit result reported to entity ESD control coordinator?
2. Corrective action from previous audits completed?
3. Are audit records complete and on file?