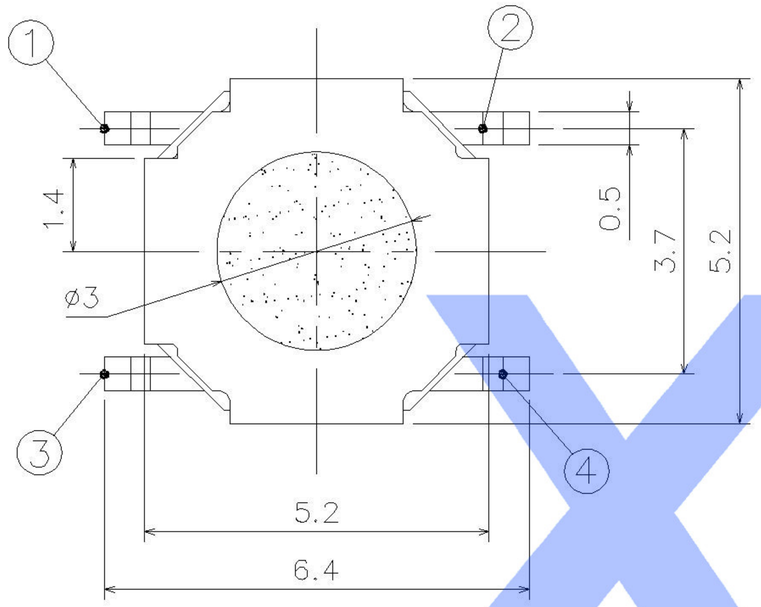

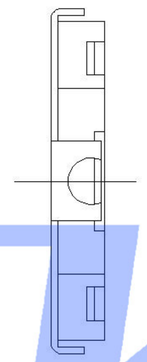

P.C.B Mounting pattern Dimension

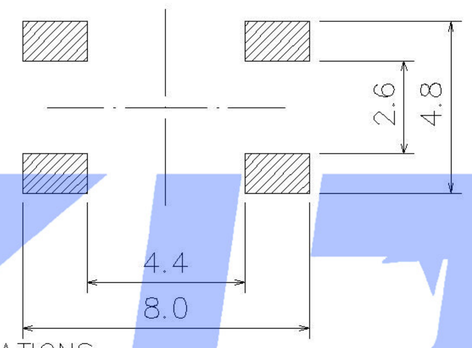

SPECIFICATIONS

Circuit Diagram

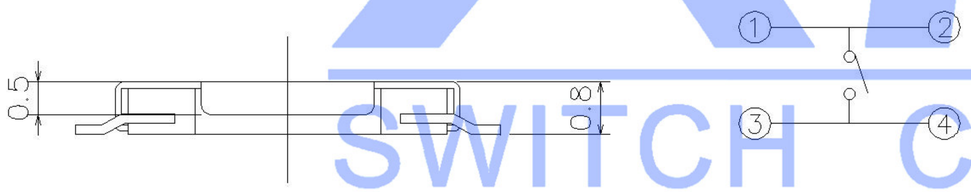

SPECIFICATION

Contact Rating	50mA, 12V DC
Contact Resistance	100mΩ max.
Insulation Resistance	100MΩ min. 500V DC
Dielectric Strength	250V AC/1 minute
Travel	0.25 mm
Operating Temp.	-25°C +70°C
Storage Temp.	-30°C +80°C

PAPT NO	TS-1187M-X
Operating Force	A:100gf B:160gf C:260gf
Height	H:0.8

ITEM	PAPT NAMF	TER,NO	QTY	MATERIAL	FINISHING	REMARK
⑤	Terminal	——	4	Brass（0.30t）	ag Plated	——
④	Contact	——	1	F.ag/SUS		——
③	Base	——	1	PA46		——
②	Cover	——	1	Brass	Tin plated	——
①	Keystake	——	1	kapton filmPI		——

MARK	DESCRIPTION	DATE	REVISED	APPROVED
△X				
△X				
△X				

REVISIONS

units:	mm	
tolerance:		
X.X	±0.2mm	
X.XX	±0.1mm	
X.XXX	±0.05mm	

UNSPECIFIED TOLERANCES

DSND		DATE		SCALE: N/A	MODEL TYPE: TACT SWITCH
DWN		DATE		VIEW:	PART NO.:
CHKD		DATE		UNIT: mm	DWG NO.: TS-1187M-X
APPD		DATE		SIZE: A4	

XKB INDUSTRIAL PRECISION CO.,LIMITED

WEIGHT	SHEET	REVISION
1.0g	1/1	A0

www.xk-dg.cn www.helloxkb.com www.helloxkb.cn

XKB SWITCH CONNECTOR