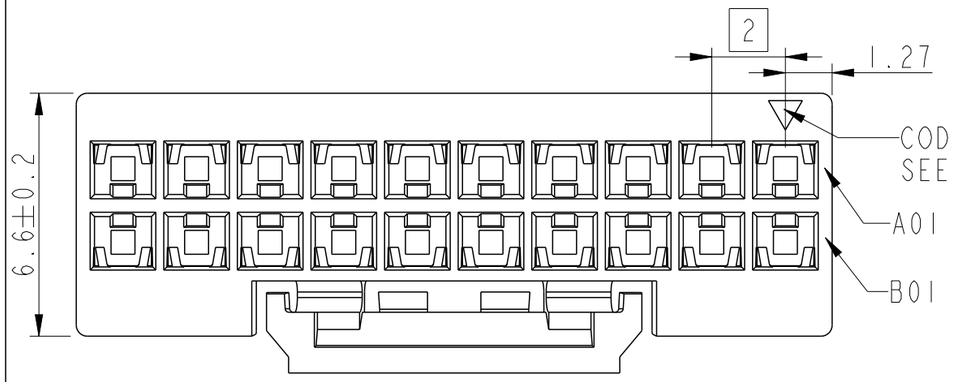

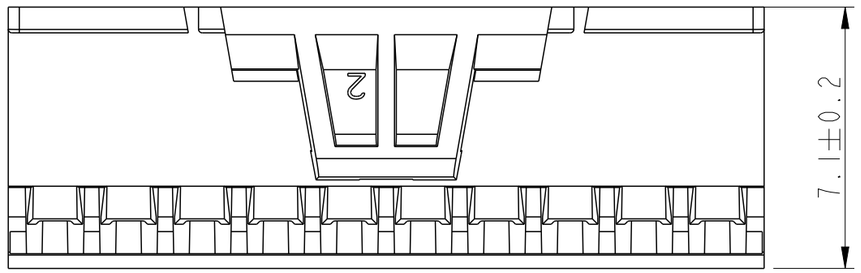

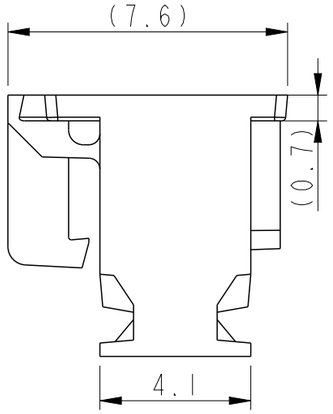

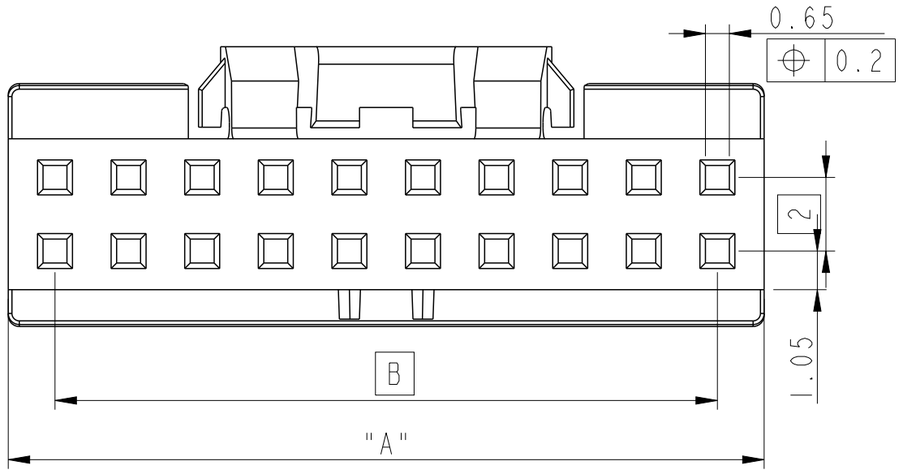

10073599-YXX-ZZZLF

- ZZZ — POLARIZATION CODE (OPTIONAL) SEE NOTE 7
- XX — TOTAL NUMBER OF CONTACTS
- Y —
  - 0 : COLOR BLACK
  - 1 : COLOR CREAM
  - 2 : HALOGEN FREE COLOR BLACK
  - 3 : HALOGEN FREE COLOR CREAM

PART NUMBER	NBR OF POS	A+/-0.2	B
10073599-Y06LF	2x3	6.54	4
10073599-Y08LF	2x4	8.54	6
10073599-Y10LF	2x5	10.54	8
10073599-Y12LF	2x6	12.54	10
10073599-Y14LF	2x7	14.54	12
10073599-Y16LF	2x8	16.54	14
10073599-Y18LF	2x9	18.54	16
10073599-Y20LF	2x10	20.54	18
10073599-Y22LF	2x11	22.54	20
10073599-Y24LF	2x12	24.54	22
10073599-Y26LF	2x13	26.54	24
10073599-Y28LF	2x14	28.54	26
10073599-Y30LF	2x15	30.54	28
10073599-Y32LF	2x16	32.54	30
10073599-Y34LF	2x17	34.54	32
10073599-Y36LF	2x18	36.54	34
10073599-Y38LF	2x19	38.54	36
10073599-Y40LF	2x20	40.54	38
10073599-Y42LF	2x21	42.54	40
10073599-Y44LF	2x22	44.54	42
10073599-Y46LF	2x23	46.54	44
10073599-Y48LF	2x24	48.54	46
10073599-Y50LF	2x25	50.54	48

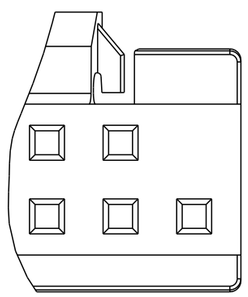

CAVITY FILLED EXAMPLE
(...-B01LF)
SEE NOTE 7

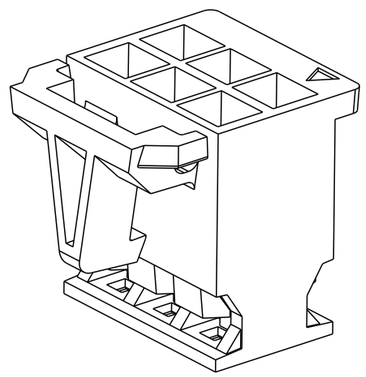

DESIGN FOR 10073599-006LF
& 10073599-008LF ONLY

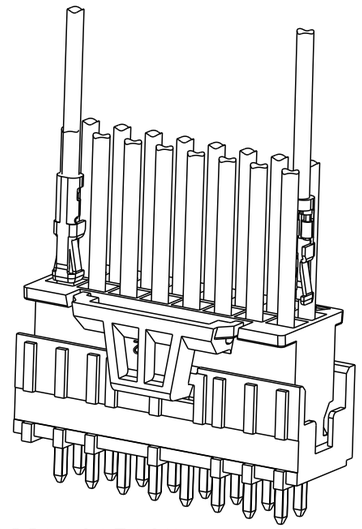

APPLICATION
SEE NOTE 2 & 3

NOTES :
1 - MATERIAL : PA6.6 25% GLASSFILLED, UL-94V-0
2 - FOR USE WITH MINITEK CTW CONTACTS:
AWG 26-30, SERIE 77138
AWG 22-24 SERIE 10044403
3 - TO BE MATED WITH MINITEK HEADERS SERIES
98414 / 98416 / 98424 AND 10075025.
4 - PRODUCT SPECIFICATIONS : GS12-415
5 - PACKAGING BULK.
6 - RoHS COMPLIANT, THE PRODUCT IS NOT
INTENDED TO BE EXPOSED TO ANY SOLDER
PROCESS.
7 - THE TRIANGLE INDICATES THE FIRT POSITION
8 - PRODUCT MEETS EUROPEAN UNION DIRCTIVES
AND OTHERS COUNTRY REGULATIONS AS PER
GS-022-008.
9 - FOR POLARIZATION, NUMBER THE CAVITY
NUMBER TO BE SPECIFIED.
EXAMPLE: -B01 = CAVITY 01 UNFLILLED.
OMIT FORM PART NUBER IS FEATURE NOT APPLICABLE.

spec ref	-	dr	Vernier, Benoi	2015/10/26	projection	mm	size A3 / scale 6:1
tolerance std ISO 406 ISO 1101	TOLERANCES UNLESS OTHERWISE SPECIFIED	eng	Laurent Mulin	2019/11/22			ecn no ELX-F-35451-1
		chr	Laurent Mulin	2019/11/22			
		appr	Wollin, Severi	2019/11/22	product family		rel level Released
surface ISO 1302	linear 0.X ±0.3 / 0.XX ±0.10 / 0.XXX ±0.05 / angular 0° ±2°	title	MINITEK CTW ACTIVE LATCH HOUSING			dwg no 10073599	rev D
		cat. no.			Product - Customer Drw		sheet 1 of 1

Amphenol FCi

© 2016 AFCI

Creo File - REV E - 2016-02-12